GARLAND

Project _____

Item _____

Quantity _____

CSI Section 11400

Approved _____

Date _____

Master Series Griddle Range Attachment

Models

- M7S
- M7T



Model M7S
17" Range Attachment
With Hi-Lo
Controlled Griddle

Standard Features

- Stainless steel front and sides
- Stainless steel door
- 6" (152mm) chromed steel adj. legs
- 33,000 BTU (9.67 kW), "H" type burner
- 1" (25mm) thick Steel griddle plate
- 2-5/16" (59mm) high welded stainless steel splash guards, sides & back
- Clip-on stainless steel backsplash for griddle plate removable stainless steel grease drawer
- Hi-Lo valve control
- Aluminized steel under all cooking surface
- Storage base interior of aluminized steel

Options & Accessories

- Stainless main back
- Stainless steel common front rail up to 102" (2591mm) wide (two or more units in a battery)
- Rear gas connection, 3/4" or 1" NPT
- Gas regulator 3/4" or 1-1/4"
- Gas shut off valve; 3/4", 1" or 1-1/4" NPT
- Gas flex hose & quick disconnect (3/4", 1" or 1-1/4" NPT x 5') w/ restraining device, please specify
- End caps and cover (NC, specify)
- Polyurethane non-marking swivel casters (4) w/front brakes
- 6" (152mm) stainless steel adjustable legs
- Modular stand, (T model)
- Storage base shelf of aluminized or stainless steel
- Stainless steel tubular high shelf, single or double-deck
- Stainless steel backguard: 10" (354mm), 17" (432mm) or 33" (838mm) high

Specifications

The 1" (25mm) thick steel griddle plate is 17" wide by 24-3/4" deep, (433mm x 629mm) and bordered by side and rear continious-welded stainless steel splash guards.

The 33,000 BTU, (9.67 kW), "H" burner controlled by a Hi-Lo valve provides uniform heat.

Heavy gauge aluminized steel radiation baffle requires no fire brick, heats evenly, increases thermal efficiency.

Natural gas or propane.

Also available with modular top, suffix T.

NOTE: Attachments suppled with casters must be installed with an approved restraining device.

NOTE: All Master Series ranges, attachments, fryers, and broilers require a high shelf or backguard flue attachment - sold separately.

Master Series Griddle Range Attachment

Garland Commercial Ranges Ltd.
1177 Kamato Road,
Mississauga, Ontario
L4W 1X4 CANADA

General Inquires 1-905-624-0260
USA Sales, Parts and Service 1-800-424-2411
Canadian Sales 1-888-442-7526
Canada or USA Parts/Service 1-800-427-6668

www.garland-group.com
8230A
05/26

WELBILT
an Ali Group Company

GARLAND

Master Series Griddle Range Attachment

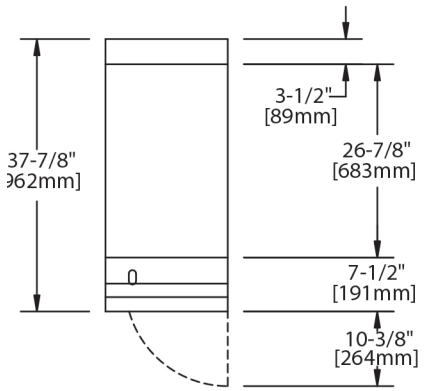

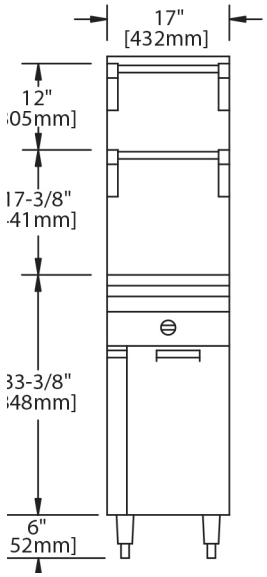

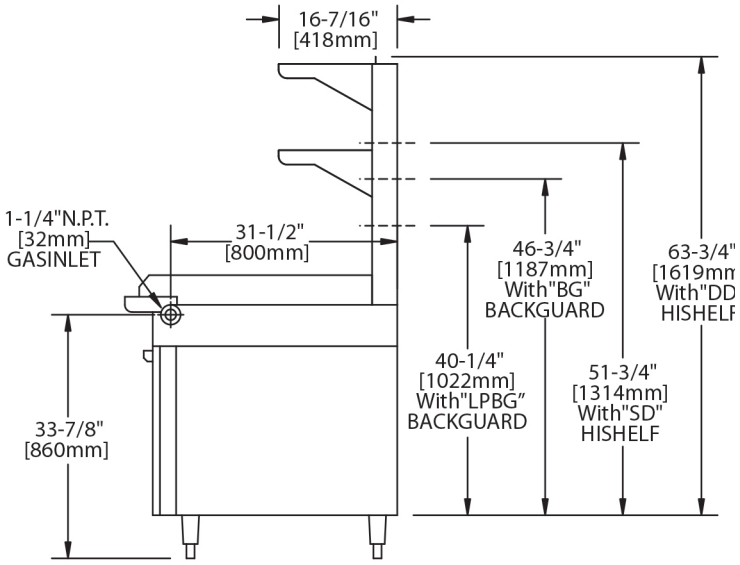

Product	Width: In(mm)	Depth: In(mm)	Height: In(mm) (w/ NSF Legs)	Height: In(mm) (w/o NSF Legs)	Storage Base Interior: in(mm)		
					Width	Depth	Height
M7S	17(432)	38(965)	36-3/8(924)	30-3/8(772)	14(356)	32-1/2(826)	20-1/2(519)
M7T	17(432)	38(965)	36-3/8(924) w/stand	9-1/2(241) w/o stand*	N/A	N/A	N/A

*Modular top has 1-1/2" seating flanges.

INPUT-BTU/hr (Natural Gas)	M7S	M7T
Input	33,000 (9.67kW)	33,000 (9.67kW)
Inlet/Manifold Size	1-1/4 NPT	1-1/4 NPT

S=Range w/Storage Base T=Modular Top

Installation Notes			Shipping (Lb/Kg) – Cu Ft
Combustible Wall Clearances [1]	Entry Clearances	Operating Pressure	M7S 260/118 – 26 M7T 155/70 – 9
Sides: 14" (356mm) Back: 6" (152mm)	Crated: 22 1/4" (565mm) Uncrated: 17-1/4" (438mm)	Natural: 6" WC (15mbar) Propane: 10" WC (25mbar)	

[1]NOTE: Installation clearance reductions are applicable only where local codes permit.

Gas input ratings shown here are for installations up to 2,000 ft. (610m) above sea level. Specify altitudes over 2,000 ft.

Please specify gas type when ordering.

Garland reserves the right to make changes to the design or specifications without prior notice.

Garland Commercial Ranges Ltd.
1177 Kamato Road,
Mississauga, Ontario
L4W 1X4 CANADA

General Inquires 1-905-624-0260
USA Sales, Parts and Service 1-800-424-2411
Canadian Sales 1-888-442-7526
Canada or USA Parts/Service 1-800-427-6668

www.garland-group.com
8230A
05/26

WELBILT
an Ali Group Company